Model Railroad Signaling and Other Electronic Projects You Can Do at Home

A Clinic in three parts by Bob Clegg

Part 1:
Basics for the Electronically Challenged

Our hobby is unique because of the many varied skills involved. Engineering, carpentry, sculpting, painting, and more.

Like it or not, electronics are playing a bigger and bigger part in our railroad modeling.

What you will see here is like 10,000 lawyers at the bottom of the ocean………

A good start!

I CAN’T DO ELECTRONICS!!!

- Can I [illegible] badly)?

- If I answered “yes” to the first THREE questions:

I CAN DO ELECTRONICS!

[redacted]

Nobody over the age of 15 can program a VCR!

How do I learn this stuff?

- Read about it
  - Transistor Fundamentals Vol. 2 by Charles A. Pike
    - SAMS Publishing, 1970
    - Out of print, but you can borrow mine!
  - Model Railroader and other hobby pubs
  - Several good internet sights
    - http://www.play-hookey.com/ Logic circuit discussions
    - http://www.aaroncake.net/circuits/ Sample Circuits
    - Manufacturer's sights Very technical, but good information
      - Fairchild
      - Texas Instrument

- Ask someone with experience
  - There are several knowledgeable members who can help
    - Names deleted for privacy reasons
    - Many members can help
    - If you can't find anyone, email me at Bobc

- Play with it
  - Buy a cheap breadboard
    - CMOS tolerant of 5V to 18V
      - Chips with numbers like LM556
      - 9V Battery
      - Wall wart power supply (regulated)
    - TTL restricted to about 5 Volts
      - Chips with numbers like 74LS00
      - Use the red and black leads from an old PC power supply
    - Transistors, diodes, resistors: be more concerned with current than voltage

Time and the available facilities has precluded this from being a hands on type clinic.

If any (or all) of you would like to try these yourself, but feel you need some assistance, you are welcome to come to my workshop.

Don't let the Terminology intimidate you

Some basics:

– Transistor:	an on/off switch
– Resistor:	a valve
– Diode:	a one way door for electrons
– IC:	Lots of this stuff in one package
– Capacitor:	a storage tank
– Anode:	The side toward the + end of the battery
– Cathode:	The side toward the – end of the battery

Two Transistor Types

- NPN

  Negative / Positive / Negative

  Gate (base) positive turns transistor on

- PNP transistors

  Positive / Negative / Positive

  Gate (base) negative turns transistor on

Three Transistor Parts

- Emitter
  - The “FROM” side
  - The pitcher
- Collector
  - The “TO” side
  - The catcher
- Base
  - The “Switch handle”
  - The umpire: time out or play ball

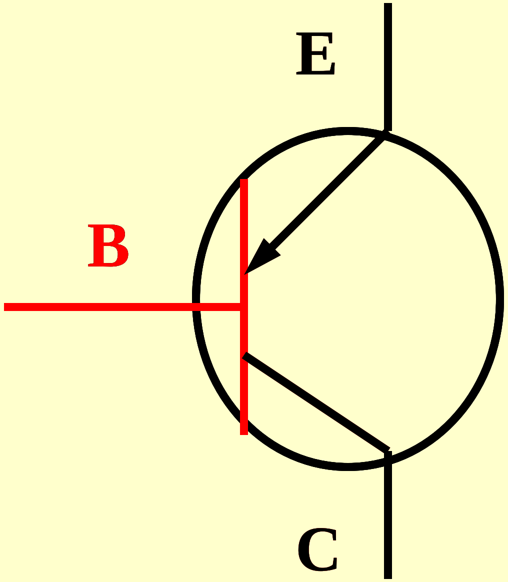

Analog electronics

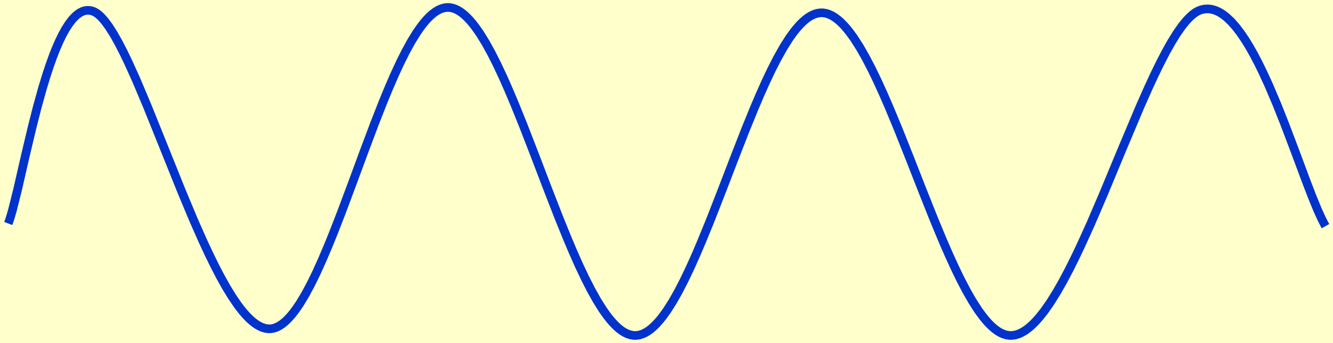

- Can be very complicated
- Many complex circuits
  - Radio & TV
  - Amplifiers
- Kind of like English Lit class

Digital Logic: Ones and Nones

- Very Simple
- Like Math class
  - Right
  - Wrong
- Two states
  - Ones
  - Nones

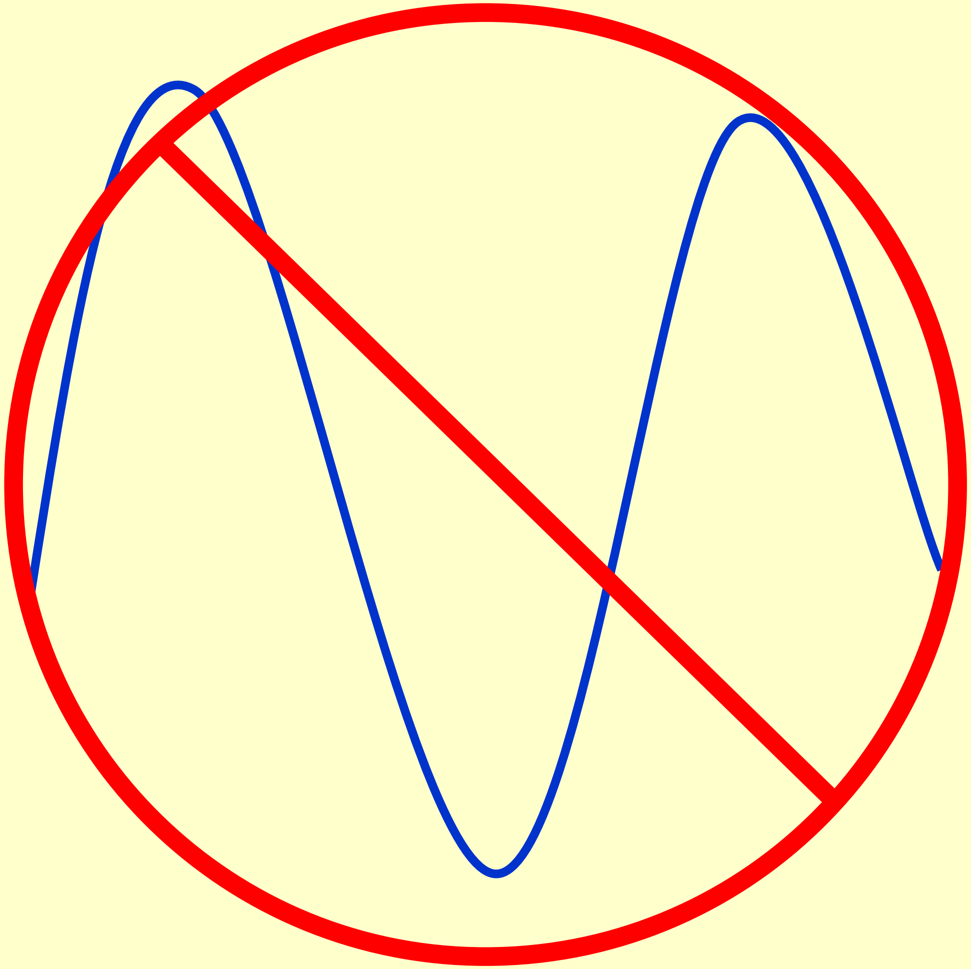

Digital Logic: Ones and Nones

- All digital electronic logic is based on
  - ones (+, yes, true)
  - nones (0, ground, false, no)

11010110110101011101100111000001

Digital Logic: Ones and Nones

- Many types of Integrated Circuits
- The most common logic circuits are
  - AND or Negative AND
  - OR or Negative OR
  - Invertors
- Each has four types of connections
  - Supply Voltage and Ground, one each
  - Input signal, one or more
  - Output signal, one or more

Digital Logic: Ones and Nones

Logical AND

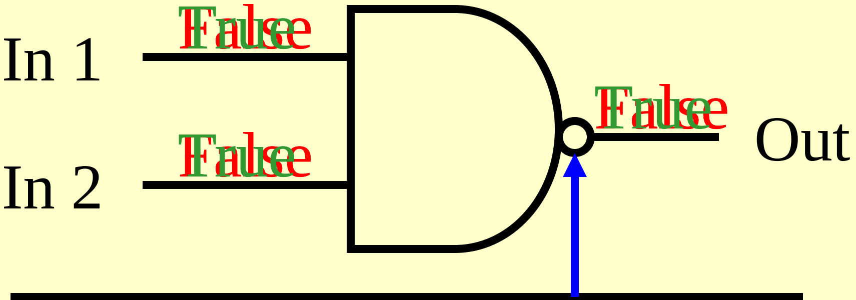
In 1
False
True
In 2
False
True
False
True
Out

Note: If the chip is designated a ***Negative*** AND it means the true value for OUT is low when both inputs IN1 AND IN2 are high (true)

In 1	In 2	Out
False	False	False
True	False	False
False	True	False
True	True	True

Digital Logic: Ones and Nones

Logical OR

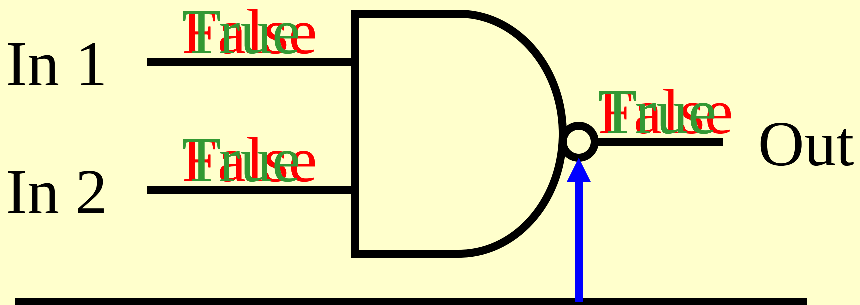
In 1
True
False
In 2
True
False
True
False
Out

Note: If the chip is designated a ***Negative*** OR it means the true value for OUT is low when both inputs IN1 AND IN2 are high (true)

In 1	In 2	Out
False	False	False
True	False	True
False	True	True
True	True	True

Part 2:
Tools and Supplies You Will Need for Your Electronics Projects

Tools you probably already have

- Soldering iron (25 to 40 watt pencil type)
  - About ten bucks for a kit at Radio Shack
- Dremel (or other motor tool)
  - If you don’t have one, buy one. You need it anyway!

Additional tools

- Carbide bits
  - Number 60
  - Number 68
- Heat sink clip
  - It came with your kit from Radio Shack

Stuff you can “borrow” from your wife

- A clothes iron
  - Tell her not to worry, it will be returned in original condition
- A small to medium Food container
  - A three pound margarine tub will do fine
  - She won’t want this back!
- Steel wool (S.O.S. pad)

Components needed to build your project

- Resistors
- Diodes
- Transistors
- Capacitors
- Integrated Circuits (ICs)
- Sockets, Headers, Connectors

Other Supplies and Miscellaneous

- Copper clad PC board
- Ferric chloride
- Pattern transfer paper
- Resist ink pen
- .031 (or smaller) 60/40 rosin core solder

Sources of Supply

- Radio Shack (Quickly becoming Telephone Shack)
  - Convenient
  - Limited selection
  - If you only want a few
  - Relatively Expensive
- Regular Electronics Supply Houses
  - Allied Electronics www.alliedelec.com
  - Mouser www.mouser.com
  - Drill Bit City (good source for carbide bits) http://shop.store.yahoo.com/drillcity/index.html

Sources of Supply (cont.)

- Surplus Electronics
  - Jameco www.jameco.com
  - Circuit Specialists www.web-tronics.com
  - All Electronics www.allcorp.com
  - Electronics Goldmine www.goldmine-elec.com
  - DynaArt (Circuit design paper) www.dynaart.com

What Will I Need to Design My Own Circuits: Required

- A basic understanding of Ohm's Law (E=IR)
  - Voltage = Current (Amps) * resistance (Ohms)
  - Example: What resistor value is needed to limit the current through a LED rated at 20 ma if my supply voltage is 12 Volts?
    - E=IR
    - E/I = R
    - 12 Volts / .020 Amps = 600 Ohms

What Will I Need to Design My Own Circuits: Optional

- Xerox copier to create resist patterns
- For original designs
  - A personal computer
  - A laser printer or Xerox copier
  - Ink jets won’t work with this stuff
  - Circuit design software
    - Several available
    - Demo editions available for free
      - Ivex Winboard is what I use

Example of WinBoard screen: Crossing Flasher

- Simple circuit
- Few components
  - One LM556 Dual Timer
  - One capacitor
  - Three resistors
  - A four pin header (opt.)
- Could be hand drawn or built on perf board

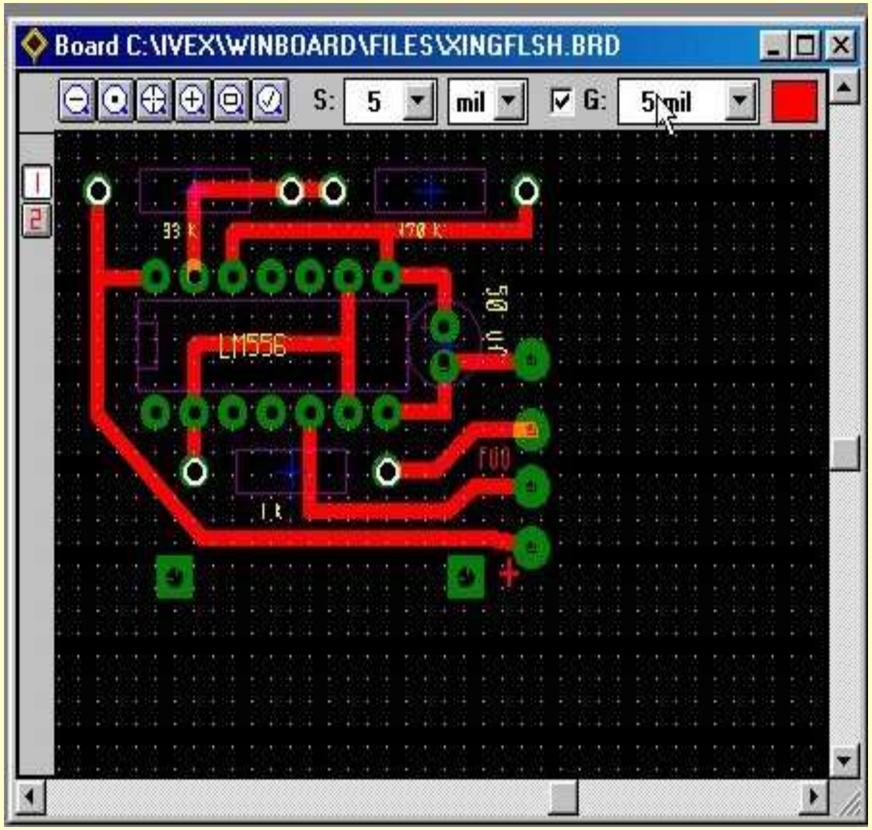

Board C:\IVEX\WINBOARD\FILES\XINGFLSH.BRD

S: 5 mil ☑ G: 5 mil

1
2
33 k
470 k
LM556
50 uF
F00
1 k
+

I CAN DO ELECTRONICS!

Model Railroad Electronics

Part 3: Making use of that which we have learned

Not quite ready to tackle a full blown signal system?

- Start small
- Don’t be discouraged if your early attempts don’t quite work the way you thought they would!!!
- Practice, practice, practice!!!
- Build confidence

- Here are some examples of smaller projects:

PC Board development steps

1. Pattern printed on paper

[illegible]

6. Component side

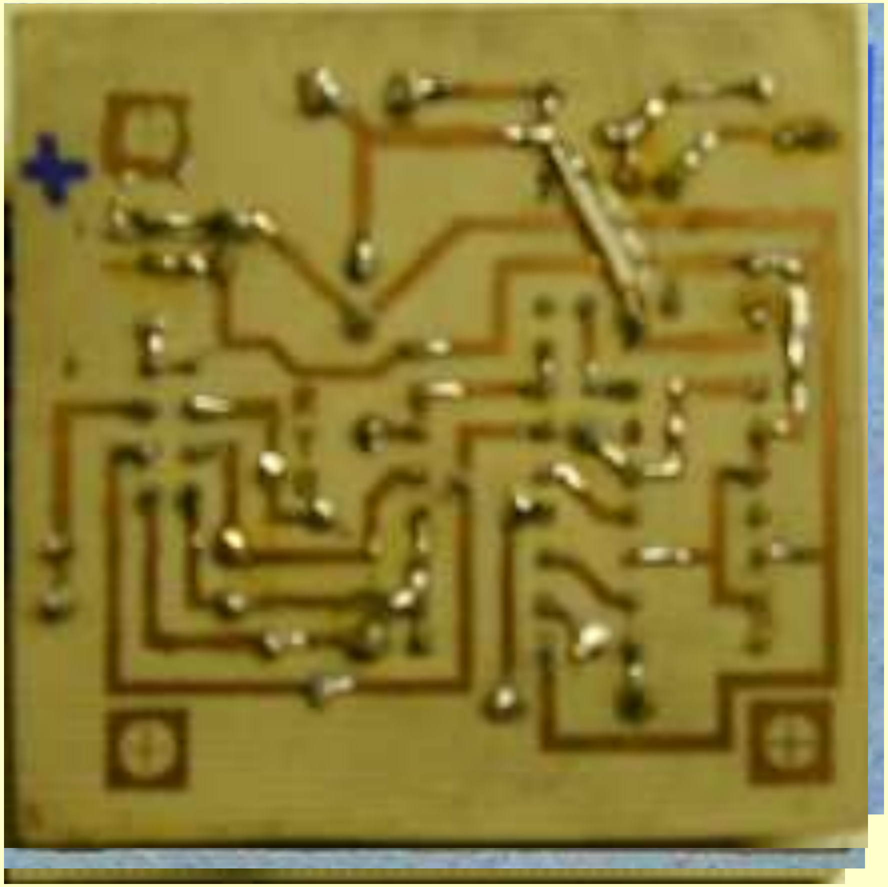

Some Easy Projects:
The Dark Detector

(Quick and dirty occupancy detection)

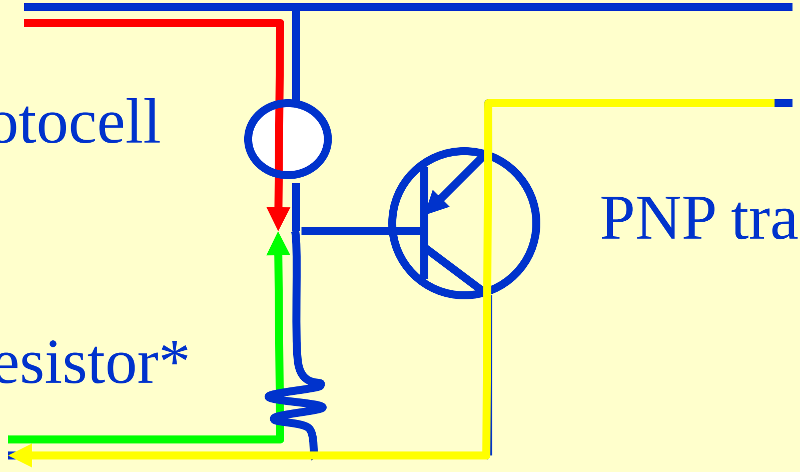
+V
Photocell
3k9 resistor*
Gnd
To +V input terminal of controlled device
To ground terminal of controlled device
PNP transistor

When photocell is covered, its resistance is near infinite, so the junction is negative and the transistor is turned ON completing the circuit

When photocell is uncovered, its resistance is near zero, so the junction is positive and the transistor is turned OFF

* Value may need to be adjusted depending on the characteristics of the photocell and voltage used

Some Easy Projects: Crossing Signal

- You saw the design for this earlier in the presentation
  - Only 5 parts
    - LM556 Dual Timer IC
    - A capacitor
    - 3 resistors
  - Use a “dark detector” to activate

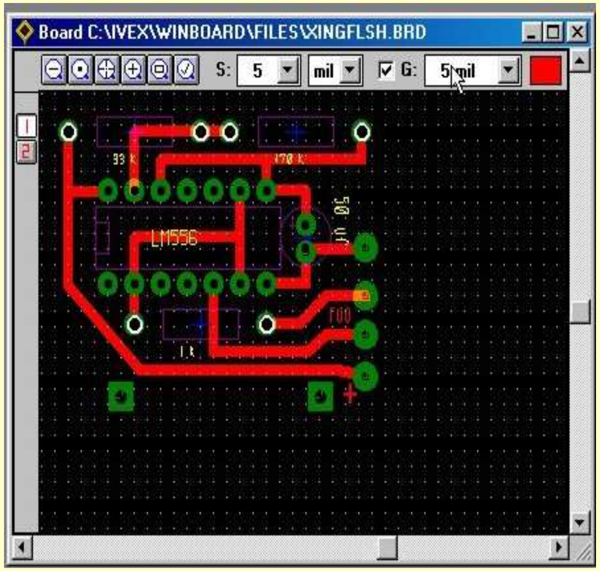

Board C:\IVEX\WINBOARD\FILES\XINGFLSH.BRD

S: 5 mil ☑ G: 5 mil

Some Easy Projects: Operating Traffic Signal

- Three color four direction traffic signal
  - Circuit is even easier than block signals
    - No external inputs
    - Hard part is fitting 12 LEDs in a scale traffic light!

Block Occupancy Detector Output

- Binary
  - – Occupied: Signal Active (True)
  - – Not Occupied: Signal not active (False)

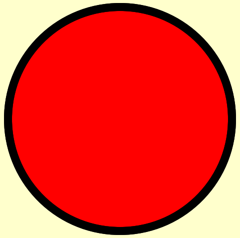

Absolute Permissive Block Signals Require At Least Three Indications

[illegible] signal

Be prepared to stop.

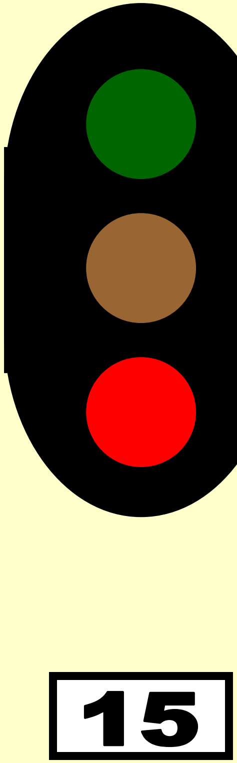

For the Pennsylvania RR fans

[illegible]

Approach next signal

Be prepared to stop.

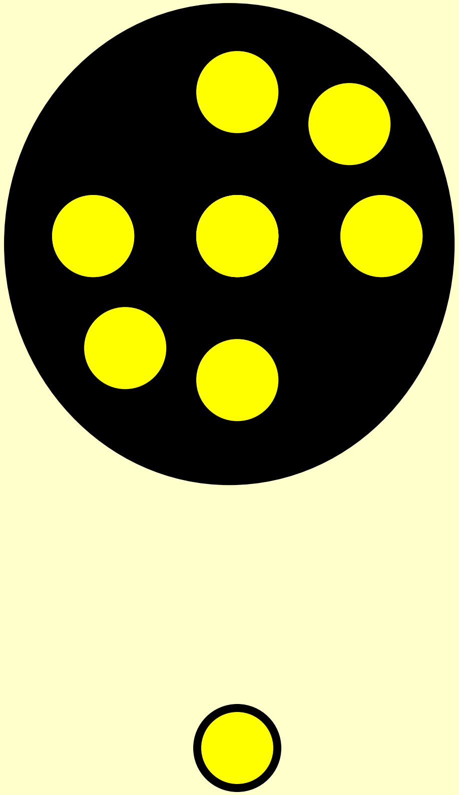

Three Color Block Signal: Design Requirements

- Uses input from detection source
  - Digitrax BDL16
  - Twin-T (with appropriate current limiting resistor)
  - Any detector that supplies proper voltage/current to power a LED
- Inputs from next block and subsequent block
  - If next block occupied display red
  - If subsequent block occupied display yellow
  - If both clear display green
- Works with Pennsy or B&O types
  - with same logic
  - Two outer LEDs connected in series or parallel

Three Color Block Signal: Board Design

- TTL Logic
  - 5V = True
  - 0V (Ground) = False
- NAND = Negative or Not AND
  - Both IN True (High) = OUT True (Low)
  - Either IN False (Low) = OUT False (High)
- PNP transistor
  - Switch on if gate (base) is low
- Resistors

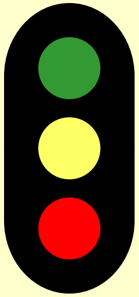

Three Color Block Signal: Logic

- Opto Isolator
  - Not shown here
  - Makes the circuit independent of the source signal type
- Two Resistors
- Three NAND Circuits
  - NAND = Negative AND
    - Both in High = Low out
    - Either in Low = High out
- Three PNP transistors
  - Switch on if Low gate

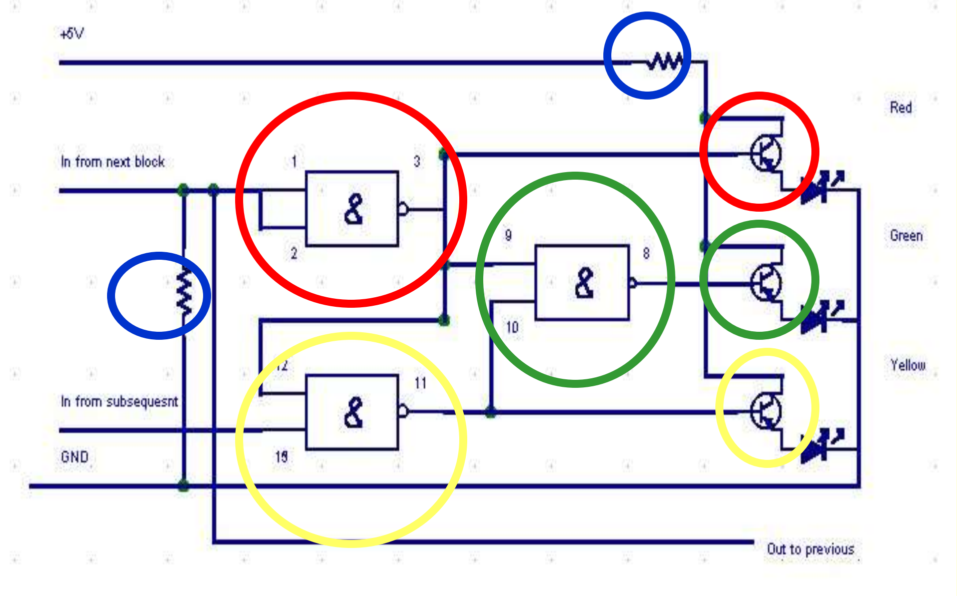
+5V
Red
In from next block
1
3
&
2
9
8
&
10
Green
Yellow
12
11
&
In from subsequesnt
GND
13
Out to previous

Three Color Block Signal: Printed Circuit Design

- Looks complicated but it’s not
- Four complete blocks on board
- Each consists of
  - 1 LVT814 opto isolator
  - 1 74LS00 quad 2 input nand
  - 3 2N3906 PNP transistors
  - 1 each 1K ohm, 100 ohm resistors
  - Headers for input, output, and power
- LM7805 Voltage regulator
  - Optional. Required if not 5V supply

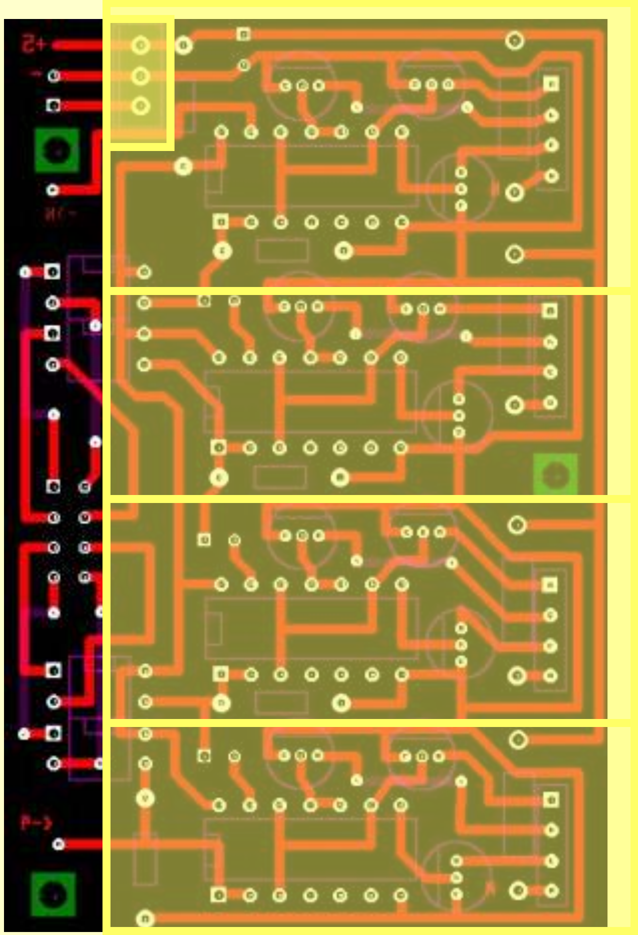

Okay, how do I build this?

- Create the printed circuit board
  - Print or copy pattern on special media
  - Clean the PC board with 000 steel wool (S.O.S)
  - Position pattern on pc board
  - Iron it on at about 300 degrees for 3 to 4 min.
  - Remove backing
  - Touch up voids with resist ink pen
  - immerse in ferric chloride solution
  - Agitate and check periodically until finished

Okay, how do I build this? (cont.)

- Clean the ink from the PC pattern
  - Acetone works best
  - Nail polish remover can be used
- Carefully drill holes for all components
  - Number 68 for most components
  - Number 60 for header pins
  - Number 60 also for any large pins like those on a TO3 type transistor (not in this project)

Okay, how do I build this? (cont.)

- Insert and solder components
- Do smallest first and work up
  - Transistors first using heat sink clip
  - Resistors, diodes, capacitors next
  - Then wire jumpers
  - IC sockets last

The finished product

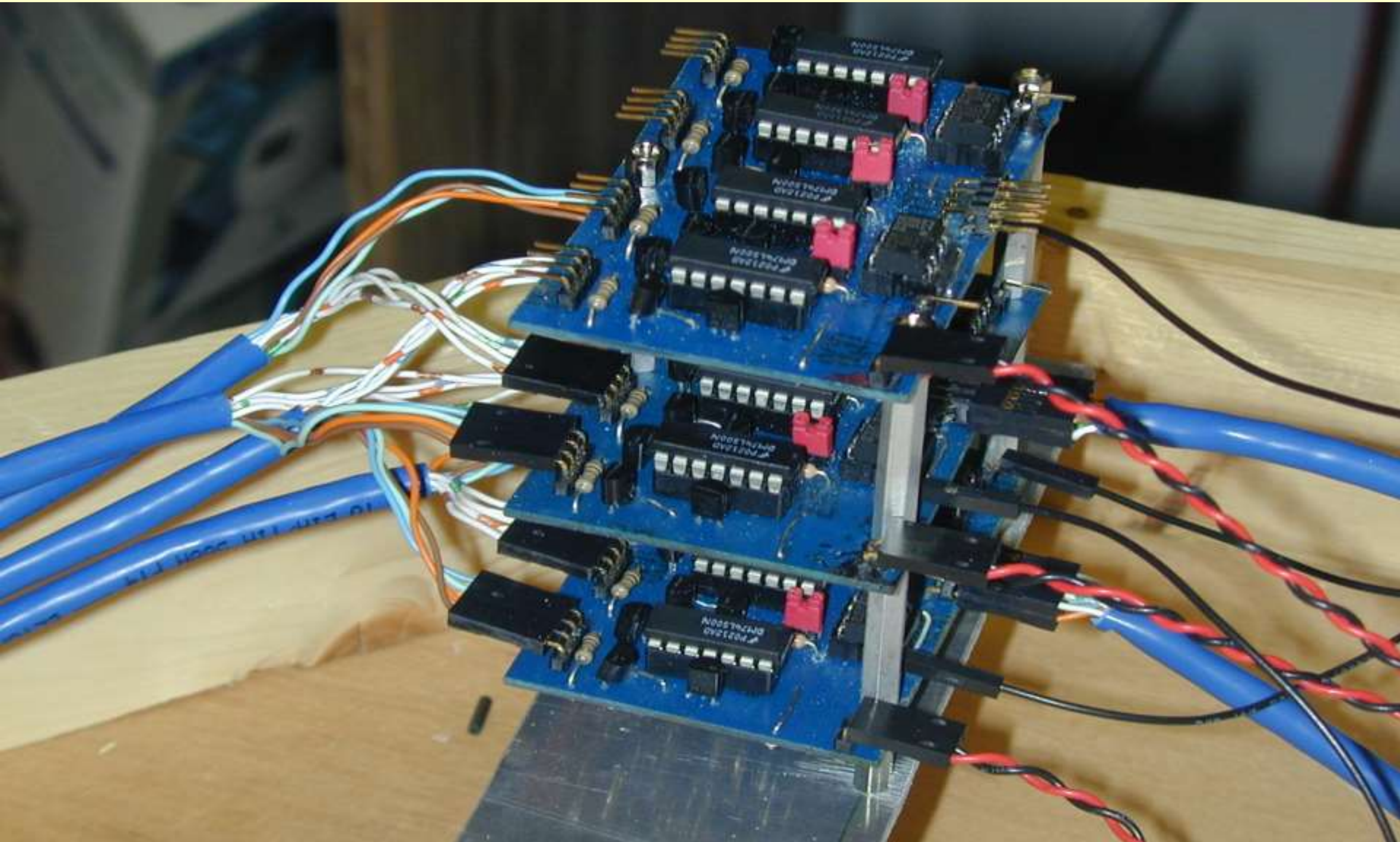

Just how much will this cost?

- Cost is relative
- Commercial units can cost more than $35 per block
  - A bit more sophisticated
    - Mine is in the works.
    - Stay tuned!
  - Time as a factor
    - Vs. a hands on hobby
    - Learning and diversification
- Digitrax SE8C just announced
  - 8 Blocks per unit $125 msrp
  - Requires a PC and software!

Just how much will this cost?

- Time: about two hours for this board with experience
- Money: depends on quantities purchased
  - 4 watt Resistors
    - 5 for $1.00 at Radio Shack
    - 100 for $1.00 @ Jameco or Circuit Specialist
  - 2N3906 PNP Transistors
    - 5 for $1.89 at Radio Shack
    - 100 for $6.00 from Circuit Specialists
  - LEDs
    - 100 for $3 to $8 depending on color from Circuit Specialists

Bill of Material for Four Circuits

2X3 in	PC Board	<	0.50
1/10	sheet of pattern paper	<	0.35
8	4 watt resistors	@.01	0.08
12	2n3906 transistors	@.06	0.72
4	LTV814 opto isolators	@.25	1.00
4	74LS00 quad 2 input NAND	@.22	0.88
4	14 pin IC sockets	@.12	0.48
2	8 pin IC sockets	@.08	0.16
12	LEDs	@.07	0.84
Header pins and housings		<	4.00
Total for parts	**For FOUR blocks**		**9.01**
Wire	Cat5 Depends on length	@.08/Ft.	

Great! I did it. Now what?

- This circuit is for one direction on multi track line
- Currently in the works:
  - Full APB circuit for control of both directions on a single track complete with “tumble down” between passing sidings for opposing traffic
    - Actually two boards piggy backed
    - Logic is more complex
    - Principles are the same!

Absolute Permissive Block Signal circuit pattern

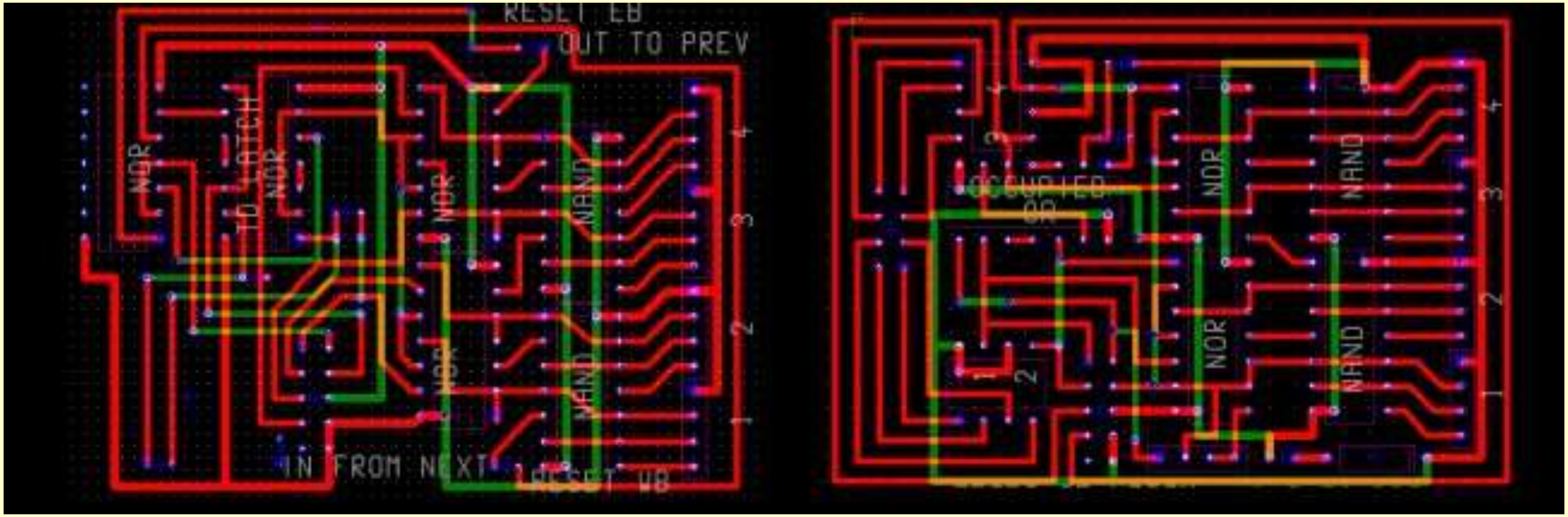
RESET EB
OUT TO PREV
NOR
TO LATCH
NOR
NOR
NAND
NOR
NAND
IN FROM NEXT
RESET WB
OCCUPIED
OR
NOR
NAND
NOR
NAND

- A bit more complex logic
- Actually 2 boards each only 3 inches square
  - One controls east, one west
  - Piggy backed
- All the same principles apply

Time and the available facilities has precluded this from being a hands on type clinic.

If any (or all) of you would like to try these yourself, but feel you need some assistance, you are welcome to come to my workshop.

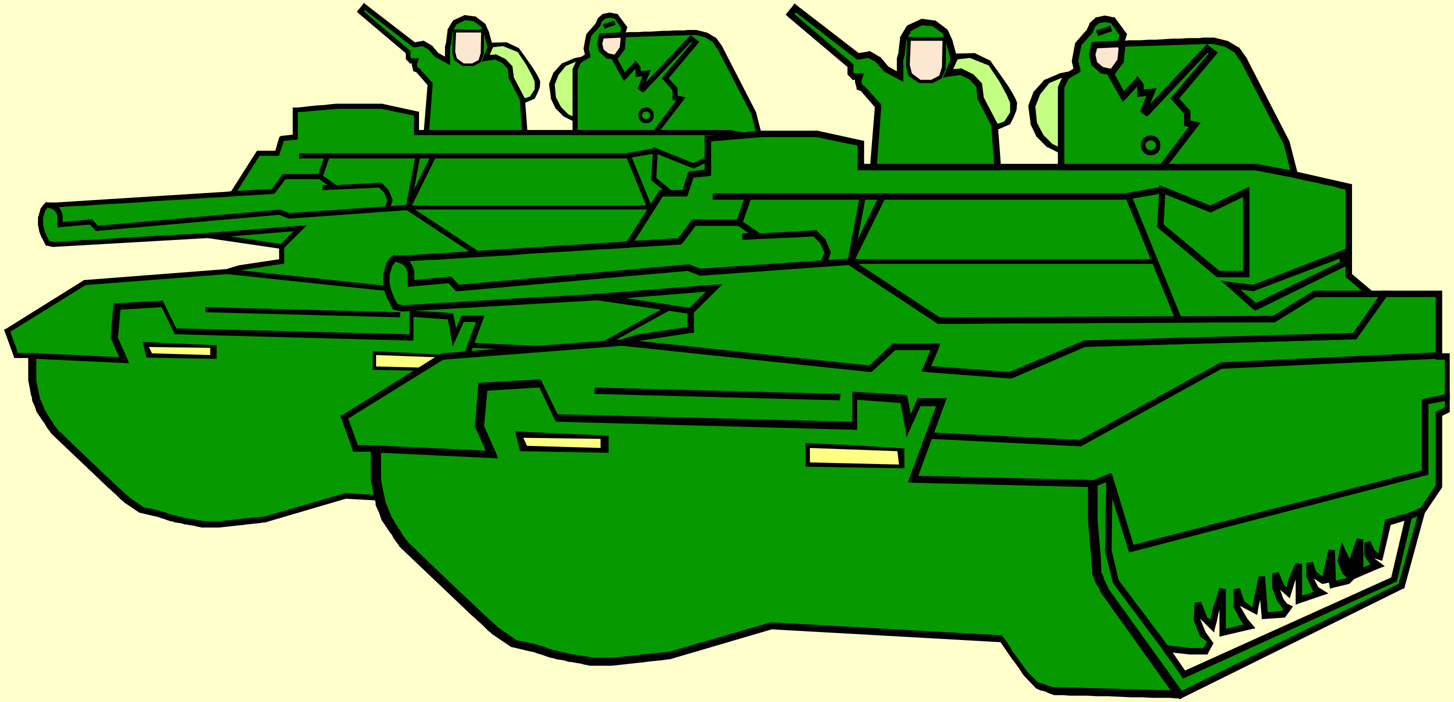Tanks for coming!